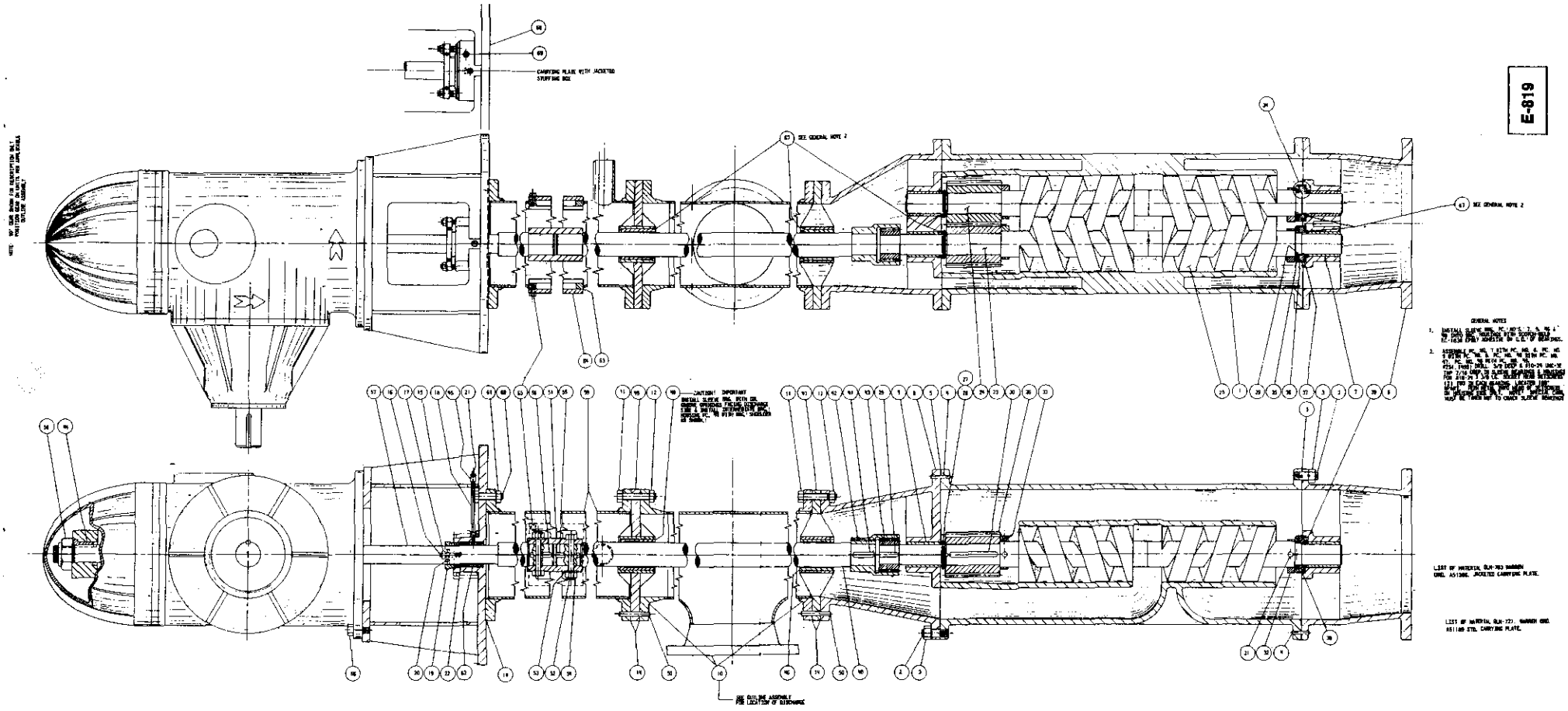SECTION 10 — SECTIONAL ASSEMBLY DRAWING